PANIDIS-SA - MS-125 Stand off (for pools & balconies)

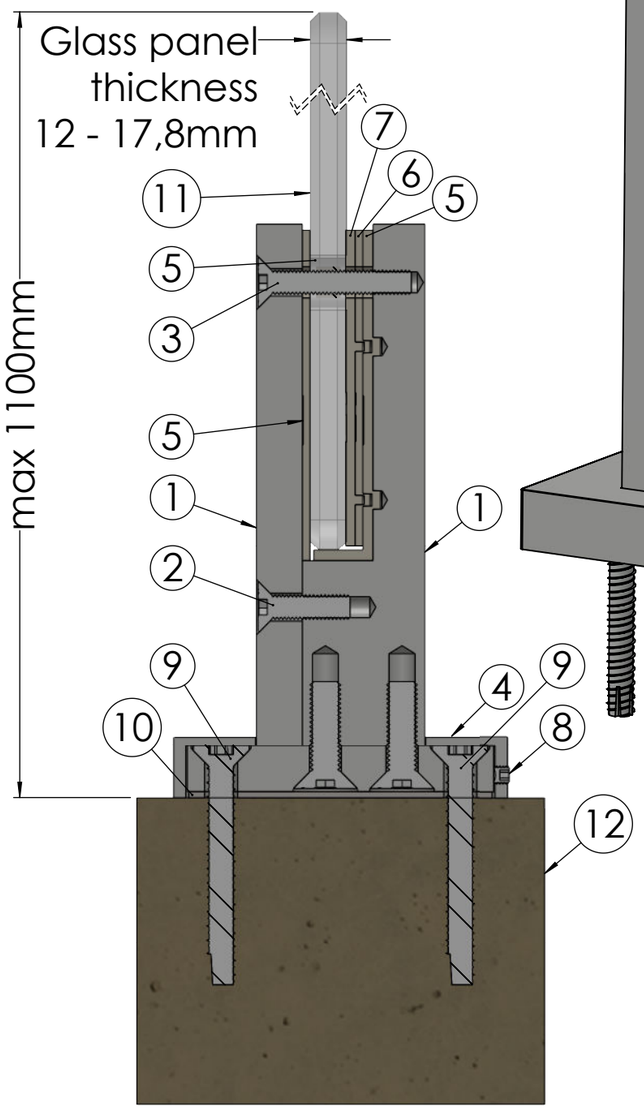

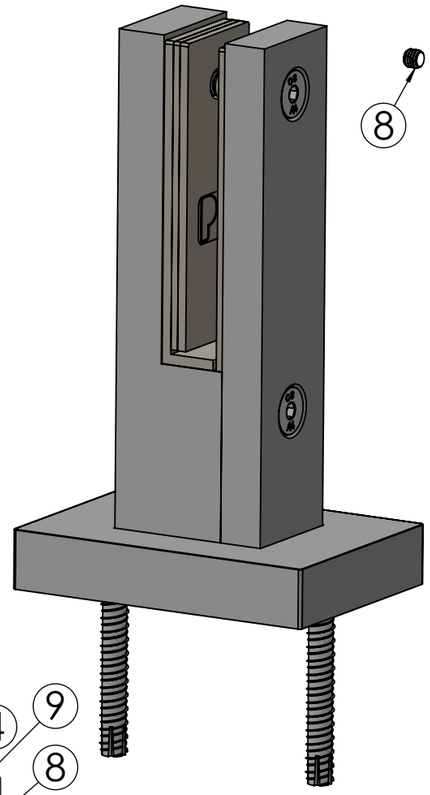

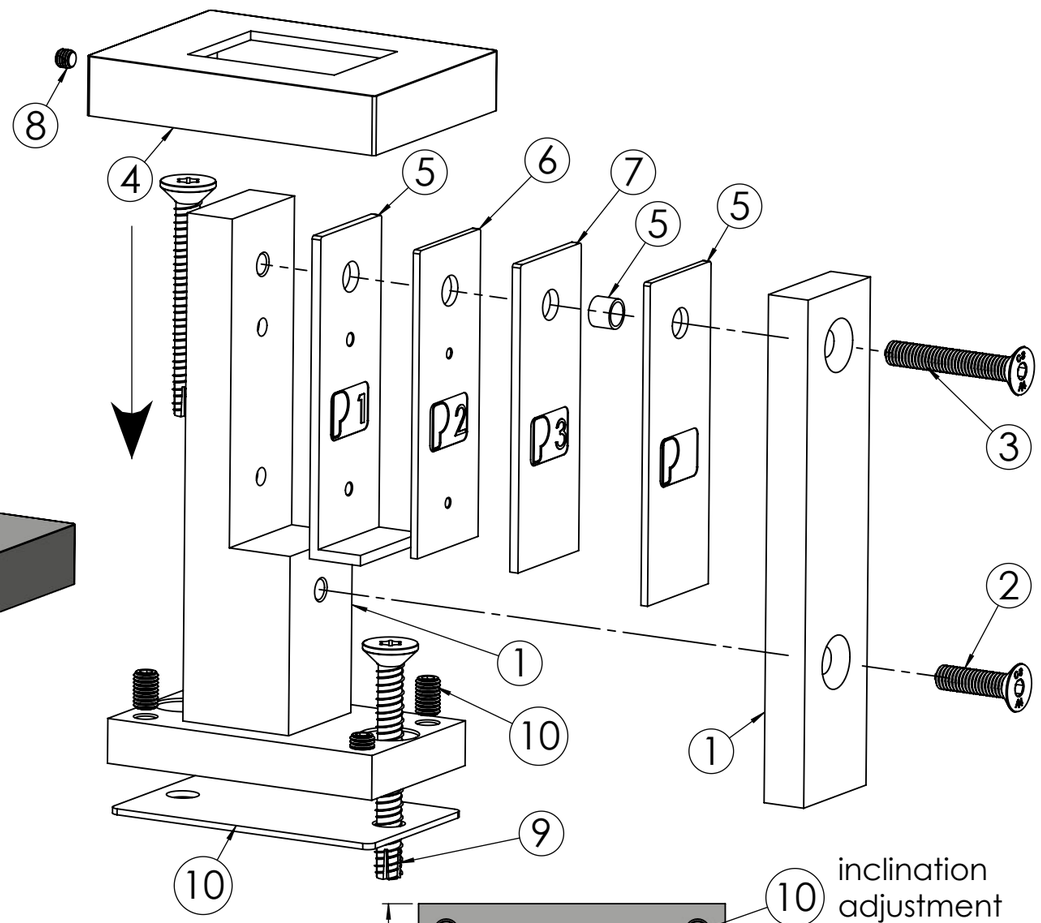

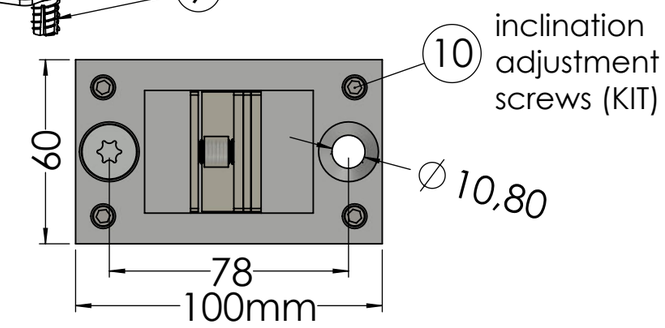

1. MS-125
2. M8x30mm DIN7991 stainless steel
3. M8x50mm DIN7991 stainless steel
4. MS-124 lid
5. Rubber tube & N.1 PA6 main wedges for 17,5-17,8mm glass panel.
6. N.2 PA6 wedge which must be added for 15mm glass panel.
7. N.3 PA6 wedge which must be added for 12-12,5mm glass panel.
8. M6x5mm DIN913 stainless steel.
9. Fixing with concrete screws Fischer FBS II 8x90 40/25 SK or Hilti HUS-3 C8x85mm 35/25/15, Hevy duty anchors Fischer FH II 15/M10 with M10x50mm countersunk screw or FH II 10/50 SK M6, or any comparable anchor
10. Inclination KIT INOX plate & 4xM8x12mm DIN916
11. Glass with thickness 12-12,5mm, 15mm or17,5-17,8mm.
12. Floor level.

inclination adjustment KIT

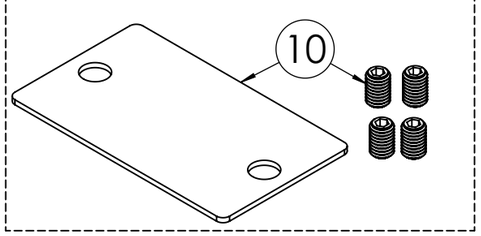

Glass dimensions and drills on them
for glasses with width up to 1000mm

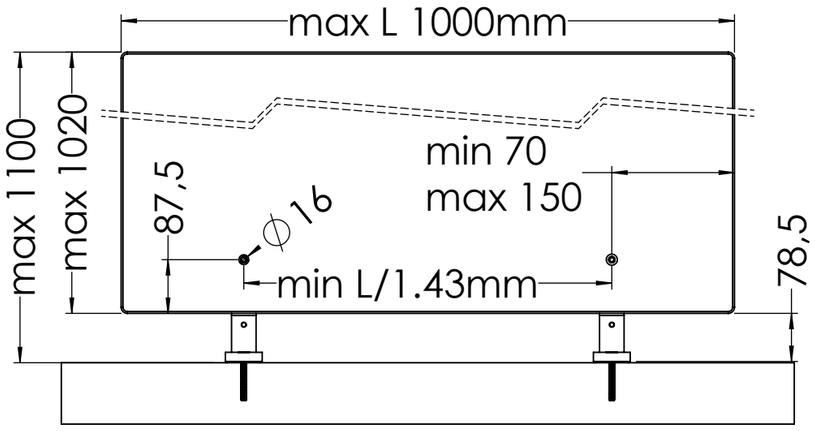

Glass dimensions and drills on them
for glasses with width up to 1500mm

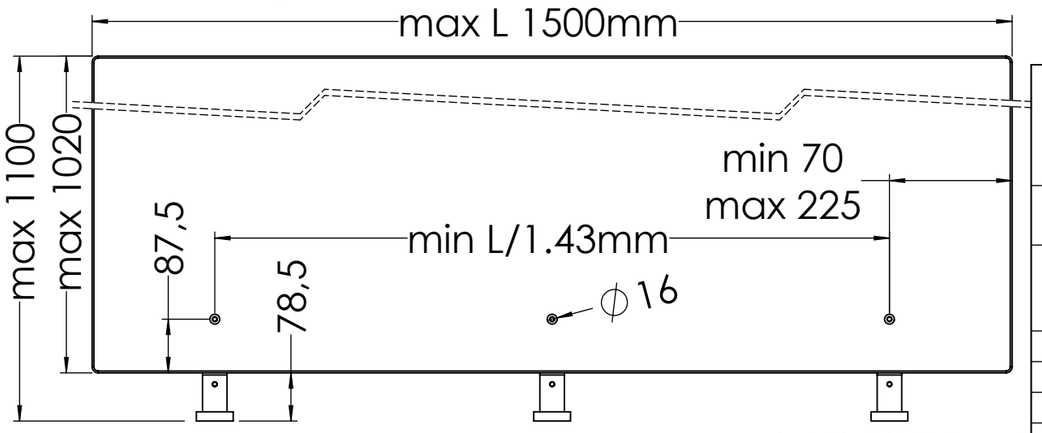

Copyright Panidis SA. All rights reserved.

PANIDIS
MAKEDONIKI • ALUMINIUM SYSTEM COMPONENTS

PANIDIS S.A
PRODUCTION OF ALUMINUM RAILING SYSTEMS & ACCESSORIES
TEL:+30 2310 780352-784 519, FAX: +30 2310 783764
www.panidis-sa.com e-mail: info@panidis-sa.com

DWG NO. MS-125		
MATERIAL:		WEIGHT:
REVISION:	DATE: 9/6/2022	DO NOT SCALE DRAWING
UNLESS OTHERWISE SPECIFIED: DIMENSIONS ARE IN MILLIMETERS		SHEET 1 OF 2
TOLERANCES:	LINEAR: ANGULAR:	SCALE:1:2

A3